Last revision: 03/26/19

Program 1 #89012T

Trim for rough-in om012

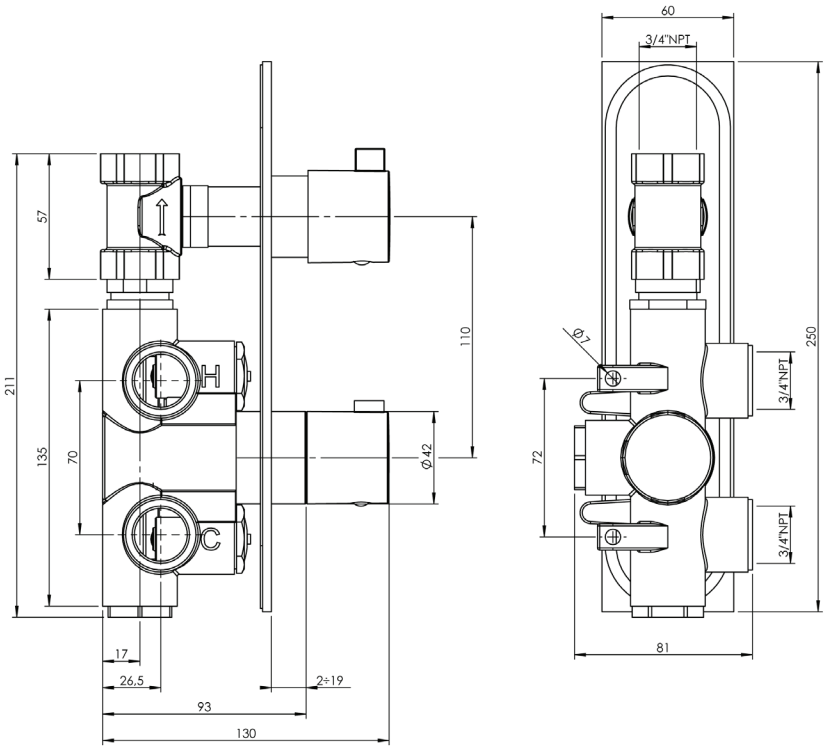

Order om012 rough-in separately
$2^{3/8}$" x $9^{7/8}$"

Finish: Chrome (#99)

Cabano cannot be held responsible for any technical or typographical errors or omissions contained within this document and reserves the right to make changes without prior notice.